Vestil Manufacturing Company

WTJ-20 Series Vehicle Mounted Jib Cranes

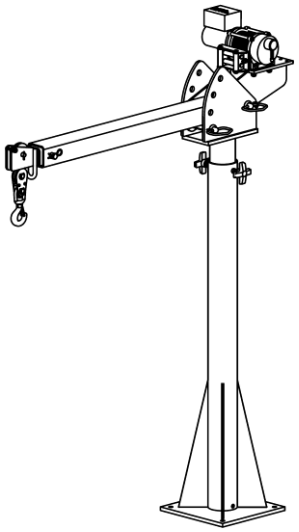

WTJ-20-3/4-DC (including galvanized models)

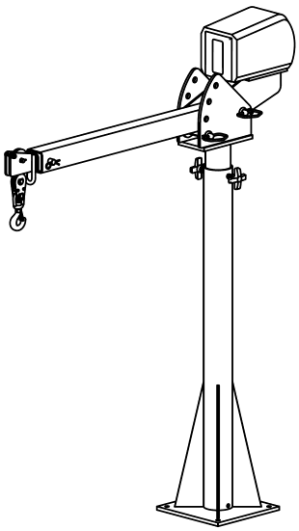

WTJ-20-3/4-AC (including galvanized and –CSA models)

Receiving Instructions

After delivery, remove the packaging from the product. Inspect the product closely to determine whether it sustained damage during transport. If damage is discovered, record a complete description of it on the bill of lading. If the product is undamaged, discard the packaging.

NOTE: The end-user is solely responsible for confirming that product design, use, and maintenance comply with laws, regulations, codes, and mandatory standards applied where the product is used.

Technical Service & Replacement Parts

For answers to questions not addressed in these instructions and to order replacement parts, labels, and accessories, call our Technical Service and Parts Department at (260) 665-7586. The department can also be contacted online at https://www.vestil.com/page-parts-request.php.

Electronic copies of Instruction Manuals

Additional copies of this instruction manual may be downloaded from https://www.vestil.com/page-manuals.php.

Table of Contents **Page**

Specifications…… 2 - 3
Exploded Views, Bills of Materials, and Installation Diagrams (Fixed Location)…… 4 - 5
Signal Words…… 6
Safety Instructions…… 6
Assembling the Crane…… 6
Installing the Crane on a Vehicle…… 7
Function Tests…… 7
Using the Crane…… 8
Boom Angle Adjustments…… 9
Boom Length Adjustments…… 9
Record of Satisfactory Condition (the “Record”)…… 9
Inspections & Maintenance…… 9 - 10
Troubleshooting…… 10
Labeling Diagram…… 10
Limited Warranty…… 11

 Copyright 2020 Vestil Manufacturing Co.

SPECIFICATIONS

Dimensions, capacity, and net weight appear in the diagrams and tables on this page and p. 3.

WTJ-20-3-DC

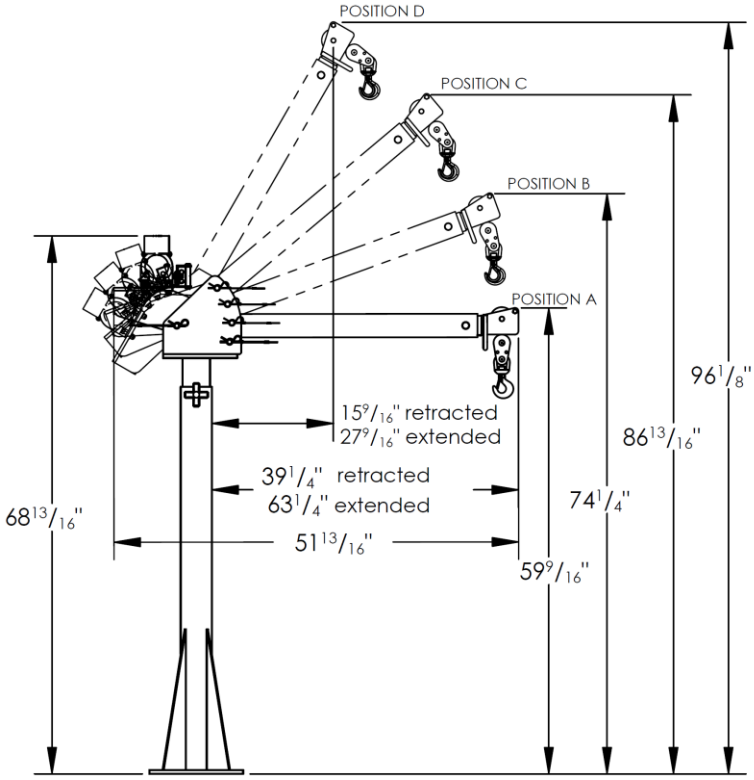

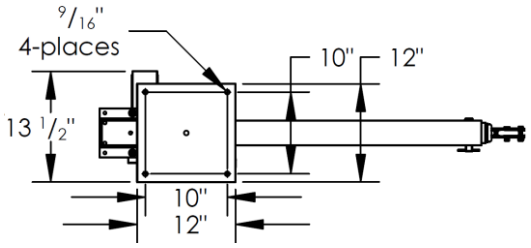

Boom position	Boom fully retracted	Boom extended halfway	Boom fully extended
A	650 lb. (295.5kg)	400 lb. (181.8kg)	250 lb. (113.6kg)
B	1000 lb. (454.5kg)	770 lb. (350kg)	600 lb. (272.7kg)
C	1250 lb. (568.2kg)	950 lb. (431.8kg)	780 lb. (354.5kg)
D	2000 lb. (909.1kg)	1500 lb. (681.8kg)	1200 lb. (545.5kg)

Capacity = 2,000 lb. (909.1kg)
Net weight = 243 lb. (110.5kg)
12V DC, 80A, powered winch with handheld pendant controller
$^{3}/_{16}$" x 46' long cable with hook (4.7mm x 116cm)

WTJ-20-4-DC

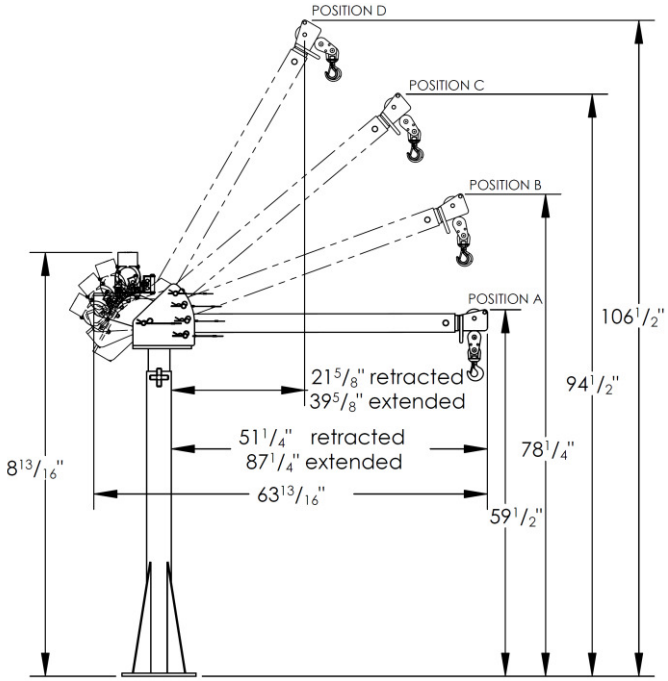

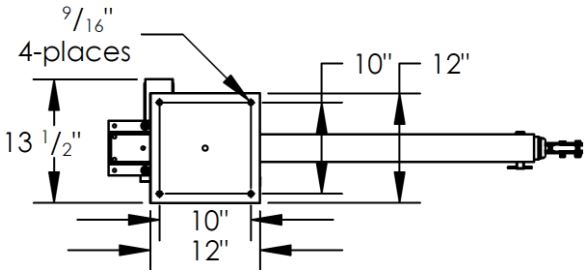

Boom position	**Boom fully retracted**	**Boom in second position**	**Boom in third position**	**Boom fully extended**
A	1100 lb. (500 kg)	800 lb. (363.6 kg)	600 lb. (272.7 kg)	250 lb. (113.6 kg)
B	1500 lb. (681.8 kg)	1200 lb. (545.5 kg)	1000 lb. (454.5 kg)	600 lb. (272.7 kg)
C	1850 lb. (840.9 kg)	1450 lb. (659.1 kg)	1250 lb. (568.2 kg)	780 lb. (354.5 kg)
D	2000 lb. (909.1 kg)	2000 lb. (909.1 kg)	1900 lb. (863.6 kg)	1200 lb. (545.5 kg)

Capacity = 2,000 lb. (909.1kg)
Net weight = 256 lb. (116.4kg)
12V DC, 80A, powered winch with handheld pendant controller
$^{3}/_{16}$" x 46' long cable with hook (4.7mm x 116cm)

 Copyright 2020 Vestil Manufacturing Co.

WTJ-20-3-AC

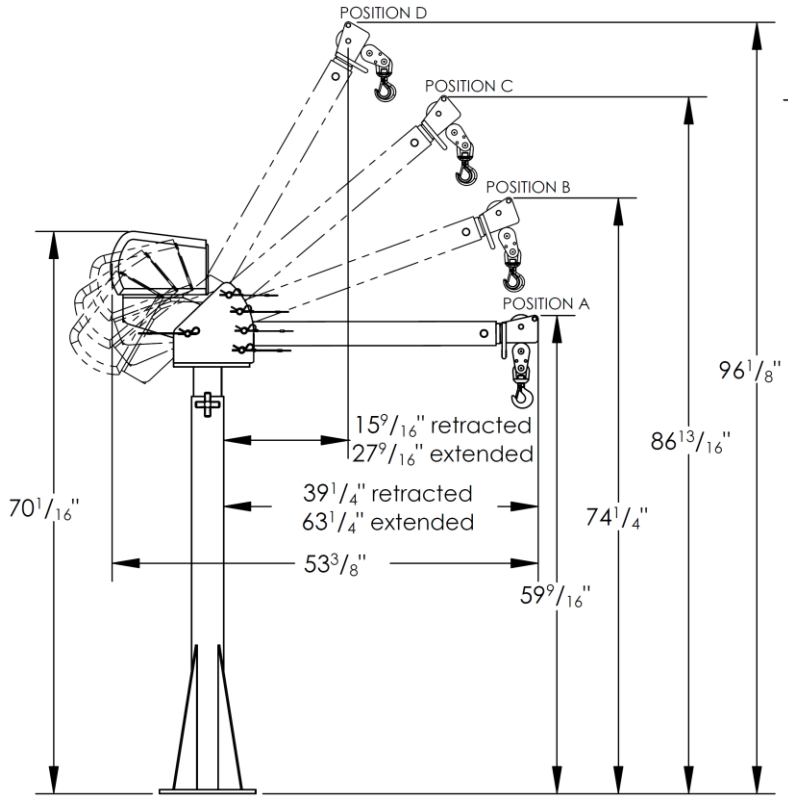

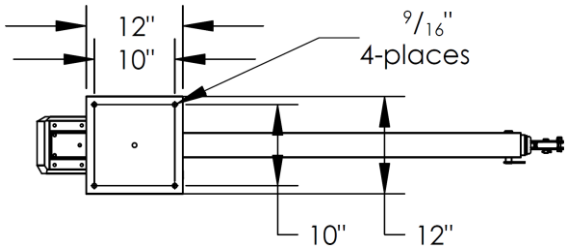

Boom position	Boom fully retracted	Boom extended halfway	Boom fully extended
A	650 lb. (295.5kg)	400 lb. (181.8kg)	250 lb. (113.6kg)
B	1000 lb. (454.5kg)	770 lb. (350kg)	600 lb. (272.7kg)
C	1250 lb. (568.2kg)	950 lb. (431.8kg)	780 lb. (354.5kg)
D	2000 lb. (909.1kg)	1500 lb. (681.8kg)	1200 lb. (545.5kg)

Capacity = 2,000 lb. (909.1kg)
Net weight = 362 lb. (164.5kg)
110V AC powered winch with pushbutton controls
7/32" x 25' long cable with hook (5.6mm x 7.6m)

WTJ-20-4-AC

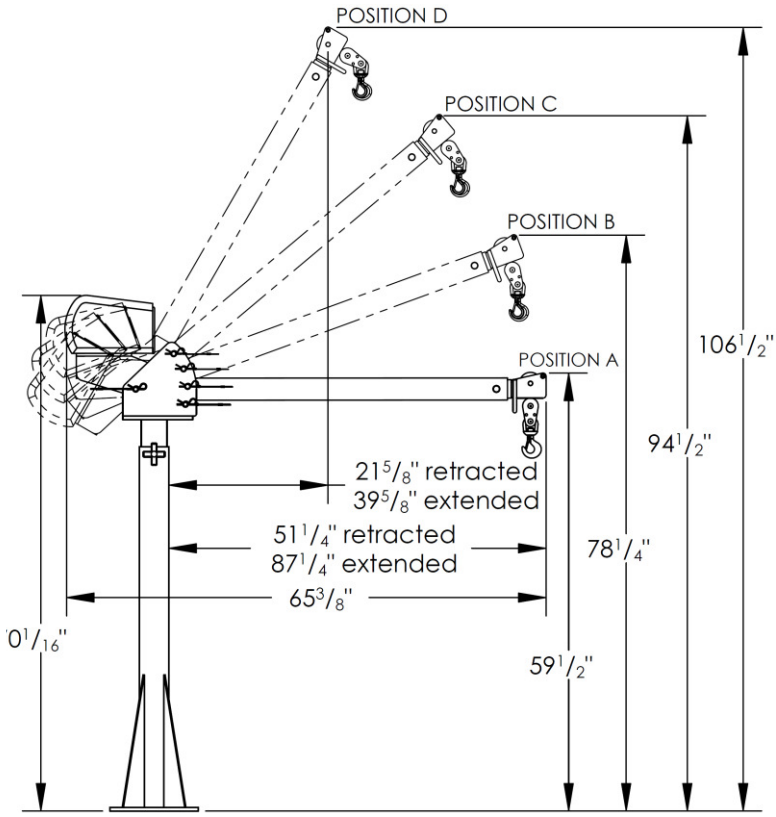

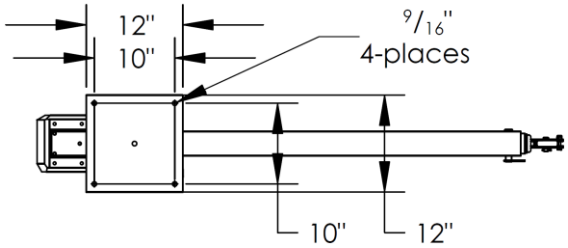

Boom position	Boom fully retracted	Boom in second position	Boom in third position	Boom fully extended
A	1100 lb. (500 kg)	800 lb. (363.6 kg)	600 lb. (272.7 kg)	250 lb. (113.6 kg)
B	1500 lb. (681.8 kg)	1200 lb. (545.5 kg)	1000 lb. (454.5 kg)	600 lb. (272.7 kg)
C	1850 lb. (840.9 kg)	1450 lb. (659.1 kg)	1250 lb. (568.2 kg)	780 lb. (354.5 kg)
D	2000 lb. (909.1 kg)	2000 lb. (909.1 kg)	1900 lb. (863.6 kg)	1200 lb. (545.5 kg)

Capacity = 2,000 lb. (909.1kg)
Net weight = 375 lb. (170.5kg)
110V AC powered winch with pushbutton controls
7/32" x 25' long cable with hook (5.6mm x 7.6m)

Copyright 2020 Vestil Manufacturing Co.

WTJ-20-3-DC & WTJ-20-4-DC EXPLODED VIEW AND BILL OF MATERIALS (28-007-111)

Item	Part no.	Description	Qty.
1		Frame, weldment, mast receiver	
	28-514-091	WTJ-20-3-DC & WTJ-20-4-DC	1
	28-514-267	WTJ-20-3-DC-GAL & WTJ-20-4-DC-GAL	1
2		Frame, weldment, mast	
	28-514-092	WTJ-20-3-DC & WTJ-20-4-DC	1
	28-514-268	WTJ-20-3-DC-GAL & WTJ-20-4-DC-GAL	1
3		Weldment, inner boom	
	28-514-100	WTJ-20-3-DC	1
	28-514-269	WTJ-20-3-DC-GAL	1
	28-514-093	WTJ-20-4-DC	1
	28-514-270	WTJ-20-4-DC-GAL	1
4		Weldment, outer boom	
	28-514-099	WTJ-20-3-DC & WTJ-20-3-DC-GAL	1
	28-514-094	WTJ-20-4-DC & WTJ-20-4-DC-GAL	1
5	28-112-042	Pin, $^1/_2$"x1$^1/_2$" retaining clevis, zinc plated	1
6	28-158-003	12V DC winch	1
7	28-027-004	Pulley, tear drop	1
8	33-112-034	Clevis pin, zinc plated, $^3/_4$"x3$^3/_4$"	1
9	99-112-057	Pin, height adjustment, $^3/_4$"	2
10	99-027-003	Pulley, cable	1
11	08-025-007	Knob, $^3/_8$"-16UNCx1$^1/_4$"	2
12	08-145-037	1-ton capacity clevis hook	1
13	37021	Nylon insert lock nut, Gr. 2, zinc finish, $^5/_{16}$"-18	5
14	11059	Bolt, $^5/_{16}$"-18UNC x 1$^1/_2$", zinc plated, #2	5
15	33006	Flat washer, zinc plated, USS, $^5/_{16}$"	4
16	45286	#11 hitch pin clip, $^1/_8$"x2$^5/_8$"	3
17	65076	$^1/_8$"x1" cotter pin, zinc plated	1

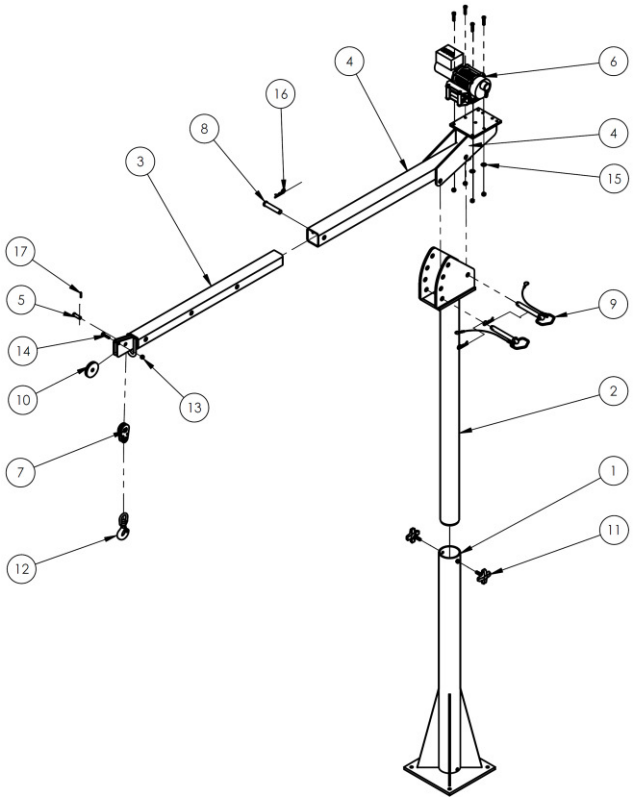

Diagram of Fixed Installation (not mounted to vehicle)

Step 1: Create a foundation for the jib. The necessary minimum foundation requirements appear in the diagrams. When the foundation is adequately cured, install $^7/_8$" jam nuts on each anchor bolts. Wind them to the surface of the foundation. Level across opposite jam nuts by raising or lowering specific nuts until all of the nuts are level. Then, fill the center of the bolt pattern (see below "Overhead View of Foundation" diagram) with grout, e.g. Morta Mix. The top of the grout pedestal should be level with the tops of the jam nuts.

Step 2: Set the crane on the foundation. Align the bolt holes in the mounting plate with the anchor bolts and carefully lower the mast onto the leveling nuts. Install $^7/_8$" lock nuts on the anchor bolts but leave them loose. Plumb the mast at 90° increments, i.e. check the vertical levelness of the mast at 4 locations equally spaced around the circumference of the mast. Adjust the leveling nuts to fine tune levelness; then tighten the lock nuts against the mounting plate.

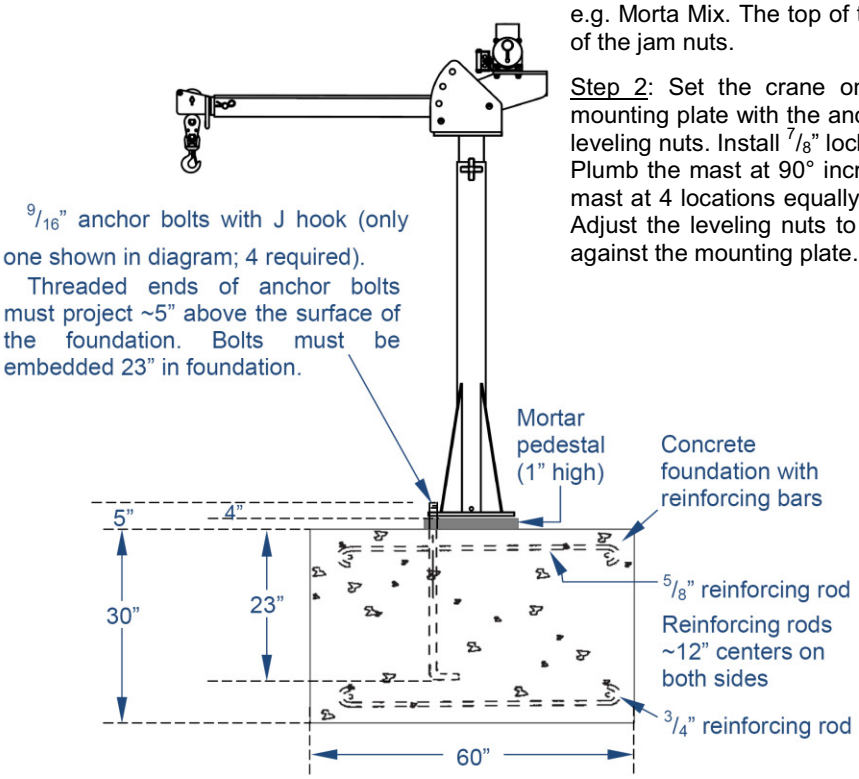

Overhead View of Foundation

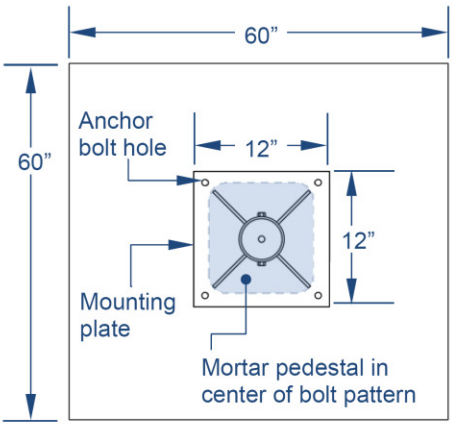

Copyright 2020 Vestil Manufacturing Co.

WTJ-20-3-AC & WTJ-20-4-AC EXPLODED VIEW AND BILL OF MATERIALS (28-006-112)

Item	Part no.	Description	Qty.
1	28-514-091 28-514-267	Frame, weldment, mast receiver WTJ-20-3-AC & WTJ-20-4-AC WTJ-20-3-AC-GAL & WTJ-20-4-AC-GAL	1
2	28-514-092 28-514-268	Frame, weldment, mast WTJ-20-3-AC & WTJ-20-4-AC WTJ-20-3-AC-GAL & WTJ-20-4-AC-GAL	1
3	28-514-100 28-514-269 28-514-093	Weldment, inner boom WTJ-20-3-AC WTJ-20-3-AC-GAL WTJ-20-4-AC WTJ-20-4-AC-GAL	1
4	28-514-099 28-514-094	Weldment, outer boom WTJ-20-3-AC & WTJ-20-3-AC-GAL WTJ-20-4-AC & WTJ-20-4-AC-GAL	1
5	28-112-042	Pin, $^1/_2$"x$1^1/_2$" retaining clevis, zinc plated	1
6	28-027-004	Pulley, tear drop	1
7	28-158-001 28-158-010	Standard models: 120VAC, 8A, without clutch, 25' cable -CSA Models: 120VAC, 8A, without clutch, 25' cable	1 1
8	33-112-034	Clevis pin, zinc plated, $^3/_4$"x$3^3/_4$"	1
9	99-112-057	Pin, height adjustment, $^3/_4$"	2
10	99-027-003	Pulley, cable	1
11	08-025-007	Knob, $^3/_8$"-16UNCx$1^1/_4$"	2
12	08-145-037	1-ton capacity clevis hook	1
13	37021	Nylon insert lock nut, Gr. 2, zinc finish, $^5/_{16}$"-18	1
14	11059	Bolt, $^5/_{16}$"-18UNC x $1^1/_2$", zinc plated, #2	1
15	33008	Flat washer, zinc plated, USS, $^3/_8$"	3
16	11103	Hex bolt, Gr. A, zinc plated, $^3/_8$" – 16 x $^3/_4$"	3
17	33622	Split lock washer, carbon steel, medium zinc finish, $^3/_8$"	3
18	45286	#11 hitch pin clip, $^1/_4$"x$2^5/_4$"	3

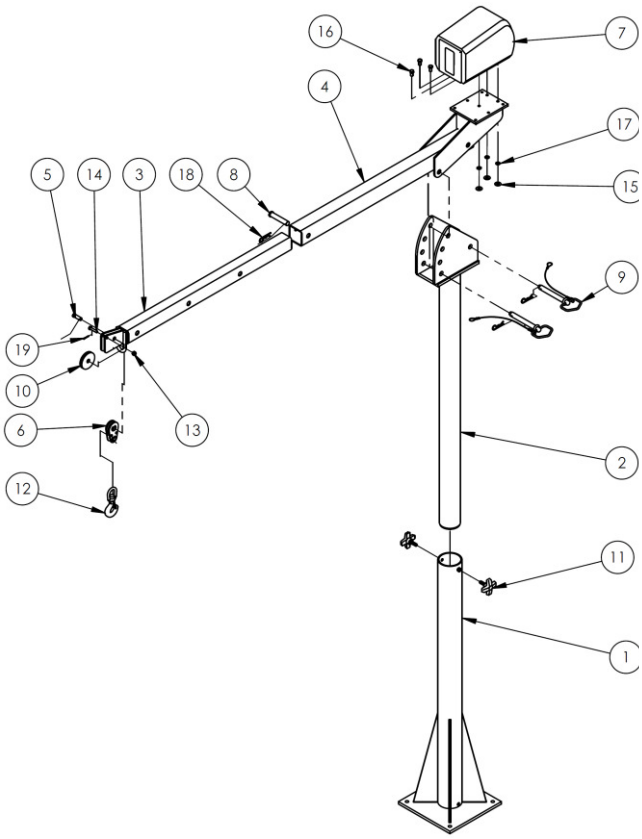

Step 1: Create a foundation for the jib. The necessary minimum foundation requirements appear in the diagrams. When the foundation is adequately cured, install $^7/_8$" jam nuts on each anchor bolts. Wind them to the surface of the foundation. Level across opposite jam nuts by raising or lowering specific nuts until all of the nuts are level. Then, fill the center of the bolt pattern (see below "Overhead View of Foundation" diagram) with grout, e.g. Morta Mix. The top of the grout pedestal should be level with the tops of the jam nuts.

Step 2: Set the crane on the foundation. Align the bolt holes in the mounting plate with the anchor bolts and carefully lower the mast onto the leveling nuts. Install $^7/_8$" lock nuts on the anchor bolts but leave them loose. Plumb the mast at 90° increments, i.e. check the vertical levelness of the mast at 4 locations equally spaced around the circumference of the mast. Adjust the leveling nuts to fine tune levelness; then tighten the lock nuts against the mounting plate.

Diagram of Fixed Installation (not mounted to vehicle)

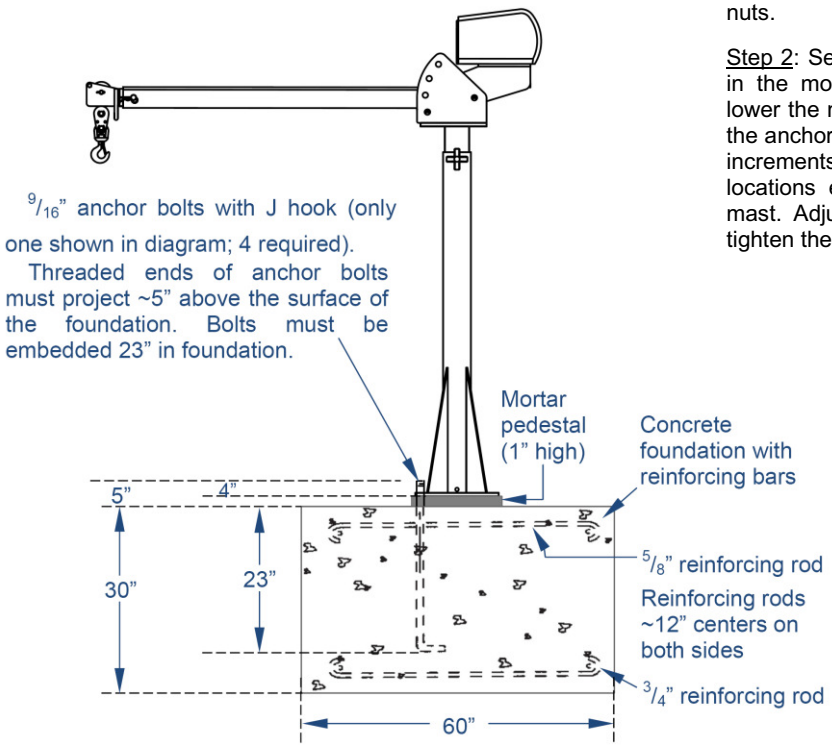

Overhead View of Foundation

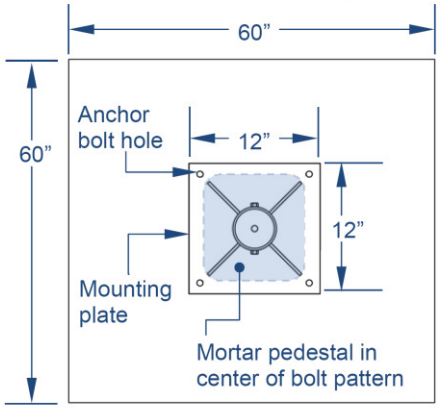

Copyright 2020 Vestil Manufacturing Co.

SIGNAL WORDS

This manual uses SIGNAL WORDS to draw attention to uses of the product that could result in personal injuries, as well as the probable seriousness of those injuries. Other signal words call attention to uses likely to cause property damage. Signal words used in this manual appear below along with the definition of each word.

DANGER Identifies a hazardous situation which, if not avoided, WILL result in DEATH or SERIOUS INJURY. Use of this signal word is limited to the most extreme situations.

WARNING Identifies a hazardous situation which, if not avoided, COULD result in DEATH or SERIOUS INJURY.

CAUTION Indicates a hazardous situation which, if not avoided, COULD result in MINOR or MODERATE injury.

NOTICE Identifies practices likely to result in product/property damage, such as operation that might damage the product or other property.

SAFETY INSTRUCTIONS

Material handling is dangerous. Vestil strives to identify foreseeable hazards associated with the use of its products. However, no manual can address every conceivable risk. The end-user ultimately is responsible for exercising sound judgment at all times.

DANGER DO not install or use the crane in areas where it will contact electrified wires. Electrocution might occur if the crane, hoist, or load, etc. contacts electrified wires.

WARNING Improper or careless operation might result in serious personal injuries.

- ALWAYS apply operation, inspection, and maintenance recommendations in 29 CFR 1910.179. Contact the occupational safety and health institution of the state where the crane is used for requirements applied to jib cranes.
- DO NOT use a damaged/malfunctioning jib! Restore the crane to satisfactory condition before returning it to service.
- DO NOT exceed the capacity of your jib. See *SPECIFICATIONS* table on p. 2 or p. 3. The weights of the load, hoist, trolley, rigging, and all other equipment attached to the jib must be added together to determine the net weight applied to the jib. The net weight must never exceed the capacity.
- Always perform the *FUNCTION TESTS* (p. 8) before each use.
- Inform all persons in the area to stay out of the area during operation.
- NO ONE should ever stand beneath or travel under the crane when a load is suspended from it.
- DO NOT use the jib to lift people.
- Do not hand from, or sit on, the boom.
- ALWAYS load the jib as recommended in *USING THE CRANE* on p. 8. Failure to properly position a load might cause the load to swing when it is lifted. Load swing might result in serious injury.
- DO NOT use the crane if any label is unreadable, damaged, or missing. See *LABELING DIAGRAM* on p. 10. Contact Vestil for replacement labels.
- DO NOT modify the crane! Modifications automatically void the *LIMITED WARRANTY* on p. 11 and might make the crane unsafe to use.

ASSEMBLING THE CRANE

1) Insert the mast into the mast receiver. Install the knobs and tighten them against the mast.

2) Pin the outer boom to the mast through the pivot holes in the boom and the pivot pin holes in the boom receiver. Secure the pin with a hitch pin.

3) Lift the end of the boom and insert another pin through the selected holes (A-D) in the receiver. Secure it with a hitch pin.

4) Slide the inner boom into the outer boom. The inner boom has a series of pin holes along its length. Review the diagrams and tables on page 2 or page 3 that match your boom model. Choose a length that is appropriate for your application. Align the selected holes in the inner boom with the pin holes in the end of the outer boom. Insert the clevis pin and secure it with a hitch pin.

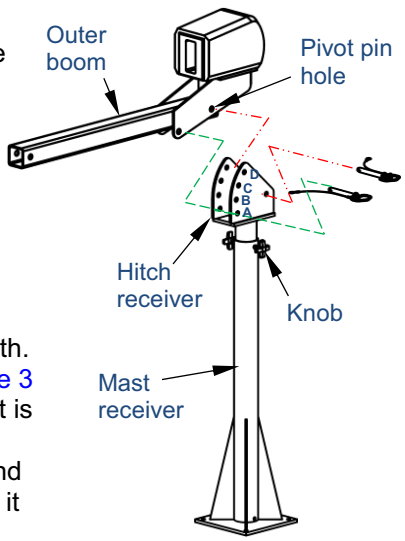

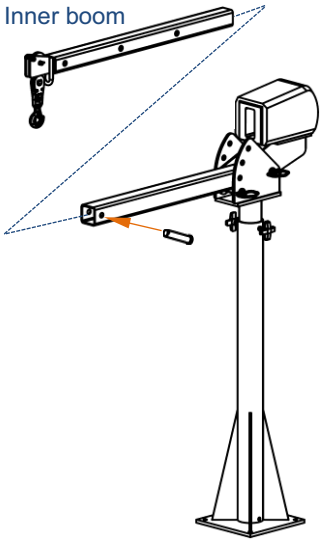

 Copyright 2020 Vestil Manufacturing Co.

INSTALLING THE CRANE ON A VEHICLE

Refer to the *EXPLODED VIEWS* on page 4 & page 5.

Step 1: Contact the vehicle manufacturer to determine the appropriate place to install the crane as well as the hardware that should be used to fasten the crane to the vehicle. (Bolt holes in the mounting plate are $^{9}/_{16}$" diameter to accept bolts up to $^{1}/_{2}$"). When choosing an installation site, consider the following factors:

a. The vehicle must be able to support the combined weight of the crane and a load weighing 125% of the capacity, i.e. 2,000 lb. x 1.25 = 2500 lb. (1136 kg)
b. The installation location must also be able to withstand the dynamic forces exerted on it by the jib as the vehicle moves.
c. The boom must be able to rotate freely, i.e. without running into the sides of the vehicle.
d. If installing the crane in a fixed position (not on a vehicle; see installation diagrams on p. 4 or p. 5), the supporting surface must be even, level, and capable of supporting the weight of the crane plus a 125% capacity load.

Step 2: The jib should remain completely assembled during the installation. Use the mounting plate of the mast receiver as a template for marking the locations of the bolt holes on the vehicle surface. Drill $^{9}/_{16}$" holes in the locations of the markings for the anchoring hardware.

Step 3: Align the bolt holes in the mounting plate with the holes drilled in step 2. One person should stabilize the jib while the other fastens the mounting plate to the vehicle using the hardware and any backing or stiffeners recommended by the vehicle manufacturer.

Step 4: Lift the end of the jib and pin it to the mast at the desired angle. See *BOOM ANGLE ADJUSTMENT* on p. 8. Confirm that the mast is able to rotate freely through the necessary range by carefully pushing the end of the boom in both directions.

Step 5: Connect the power cord to the power supply. On DC-powered units, the power supply cord and pendant control cable must be plugged into the winch.

Step 6: Lower and raise the cable hook using the handheld pendant controller. Watch the cable and confirm that it smoothly spools off of and onto the winch drum.

Step 7: Load test the jib by using it to lift a test weight equal to 125% of the rated capacity (2,500 lb.). Inspect both the crane and the vehicle (or supporting surface) after performing the load test. Look for cracks, warps, and other forms of damage at and around the installation site. Repair the site, if necessary, and perform another load test to confirm that problems are resolved.

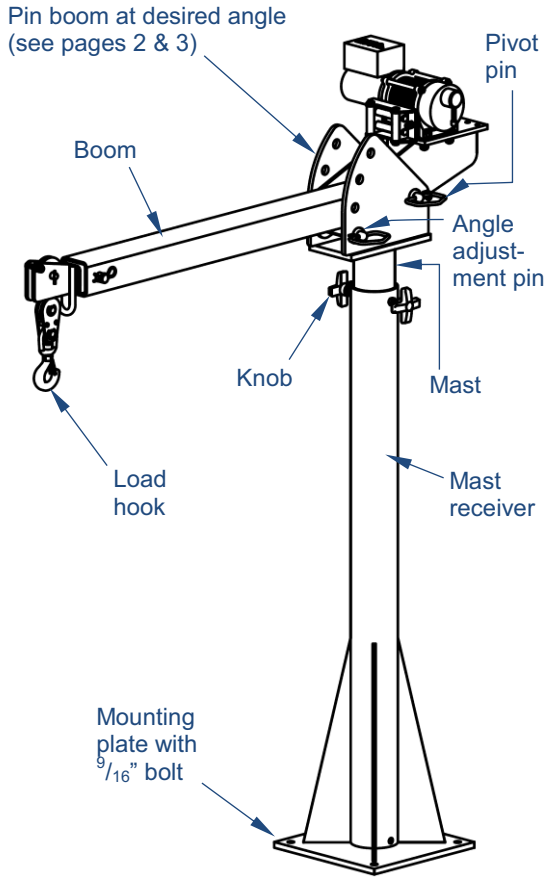

Overhead View of Mast Receiver

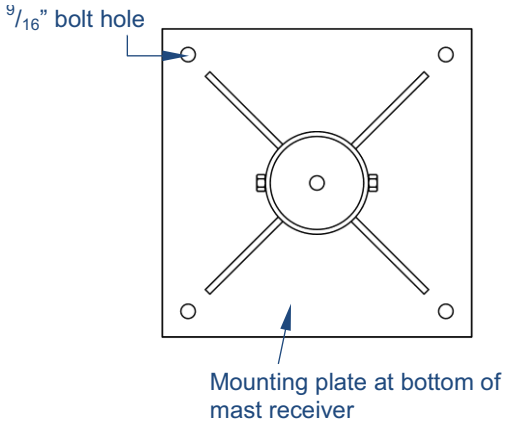

FUNCTION TESTS

Verify that the jib operates normally by performing the tests below. If an issue is discovered, tag the crane "Out of Service". Restore the crane to normal operating condition before returning it to service.

1. Test the mast bearing: Rotate the boom in both directions. Make sure that it rotates smoothly. Listen for unusual noises. If the crane wobbles or is unusually noisy as it rotates, remove the mast and grease the bearing at the bottom. If lubrication does not resolve the problem, the bearing might need to be replaced. Contact the factory to discuss the problem and to order replacement parts.
2. Test the winch: Lower and raise the load hook. Make sure that the hook moves at a constant rate. The cable should not bind as the winch operates.

 Copyright 2020 Vestil Manufacturing Co.

USING THE CRANE

[NOTE: An auxiliary handle is provided with AC-powered winches. It is a means for manually winding/unwinding the cable and should only be used if the winch does not operate (e.g. loss of power). The handle must not be attached when the winch operates under its own power.]

1. Connect the power cord to the power supply.
   a. AC units: connect to a properly grounded, GFCI-protected, 115V outlet.
   b. DC units: make sure battery connections are secure.
2. Apply appropriate rigging to the load.
3. Adjust the length and angle of the boom as your application requires. Consult the appropriate *SPECIFICATIONS* table on p. 2 or p. 3 to ensure that the load does not exceed the capacity of the crane in its present configuration.
4. The winch is electronically controlled.
   a. DC-powered jibs utilize a constant pressure ("dead man") pushbutton controller.
   b. AC-powered units are controller with a toggle switch located on the winch body.

   Press the DOWN button on the handheld controller (DC units), or press the toggle switch in the DOWN direction (AC units). The winch will operate only while a control button is pressed. Releasing a control button will stop the winch and the hook will maintain its position. Lower the hook sufficiently that the load rigging can be attached to it. The load center should be directly below the hook to prevent significant load swing as the load rises. Proper and improper positioning is diagrammed below:

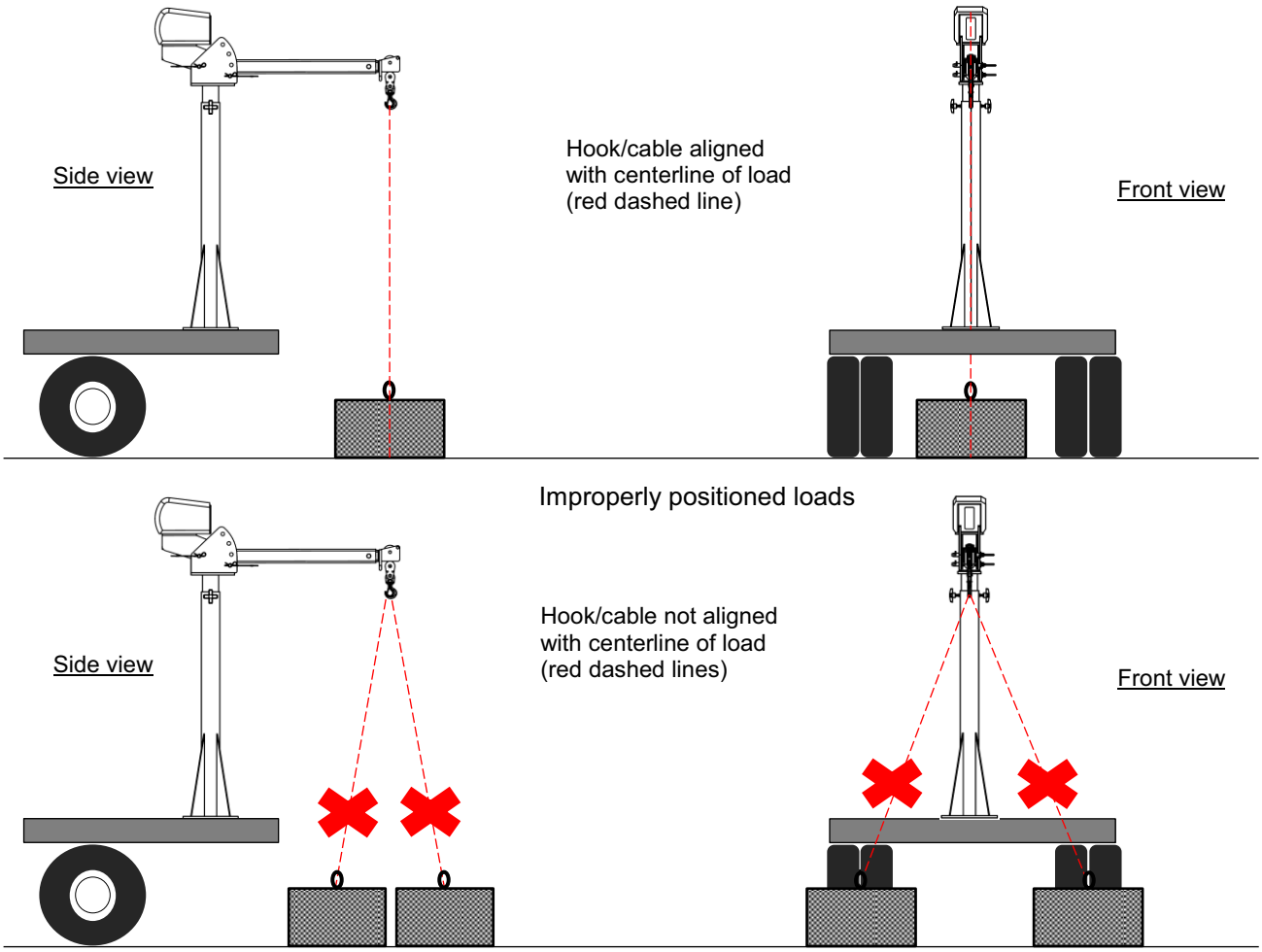

5. Tighten the knobs tightly against the mast.
6. Press the UP button/toggle switch to raise the load. Loosen the knobs and rotate the boom slowly and direct the load to the desired location. Lower the load so that it is entirely supported by the vehicle before moving the vehicle.
   NOTE: The winch is designed for intermittent use. Extended use without pause to allow the motor to cool will damage the motor. Maximum continuous run time is 3 minutes.
7. Put the crane into transport configuration:
   a. Retract the boom. See *BOOM LENGTH ADJUSTMENTS* on p. 9.
   b. Remove the pivot pin. Rotate the boom so that it rests against the mast. Strap the boom to the mast to prevent it from bouncing during transport.
   c. Unplug the winch power cord and store it inside the vehicle whenever the jib is not in use.

Copyright 2020 Vestil Manufacturing Co.

BOOM ANGLE ADJUSTMENTS

The boom can be set at any of 4 positions to change the maximum lifting height. To adjust the boom angle:

1. Press the DOWN button to lower the hook a few feet below the end of the boom.
2. Remove the hitch pin from the end of the angle adjustment pin (the "AAP").
3. Pull the AAP from the boom receiver. Do not remove the pivot pin.
4. Raise the boom. Align the pin holes in the boom with the desired position (A-D) and reinsert the AAP.

REMINDER: Boom angle affects the lifting capacity of the crane. After changing the boom angle, consult the appropriate *SPECIFICATIONS* table on either p. 2 or p. 3 to determine the capacity of your crane.

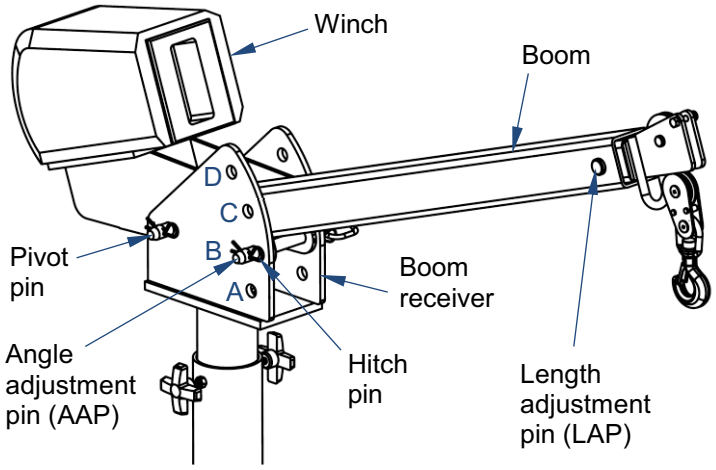

BOOM LENGTH ADJUSTMENTS

The boom consists of a 2 telescoping segments to allow the overall length can be adapted as necessary for specific applications. Before adjusting the boom length, unload the crane. To change the boom length:

1. Lower the hook by pressing the DOWN button.
2. Remove the hitch pin from the end of the Length Adjustment Pin ("LAP") and remove the LAP.
3. Grasp the end of the (inner) boom.
4. Pull the inner boom until the appropriate pin holes in the inner and outer boom segments align.
5. Reinstall the LAP and the hitch pin.

REMINDER: Boom length affects the lifting capacity of the crane. After changing the boom length, consult the appropriate *SPECIFICATIONS* table on either p. 2 or p. 3 to determine the capacity of your crane.

RECORD OF SATISFACTORY CONDITION (THE "RECORD")

Before using the crane for the first time, make a written record of the appearance of each part of the crane and how it operates. Thoroughly photograph the unit from multiple angles. Include close range photos of all pivot points, anchoring points, labels, pins and pin holes, the winch, cable and hook. Cycle the winch up and down. Describe how the unit looks and sounds as the winch operates. Measure the throat opening of the hook and record the measurement. Collate all writings and photos into a single file. This file is a record of the unit in satisfactory condition.

INSPECTIONS & MAINTENANCE

Inspect and maintain the unit as described below to preserve satisfactory operability. Compare all inspection results to the RECORD to determine whether a component is in satisfactory condition or requires repair or replacement. Restore the unit to satisfactory condition before returning it to service. If the unit cannot be restored to satisfactory condition, disassemble it and dispose of the parts. The unit must be retested at 125% of its rated capacity anytime the crane is repaired or modified.

Inspect the following at least once per month:

1. **Winch and pulleys**: Cycle the winch up and down. Confirm that the cable winds off of and back onto the drum smoothly. The hook should not lower on its own. The cable pulley should not be loose or severely worn and should rotate freely as the cable passes over it.
2. **Winch cable**: Check for reeving, fraying, thinning, bird-caging, & elongating regions. Replace the cable if damaged.
3. **Winch power cord**: Examine the cord for damage and areas where the outer sheath has been damaged. Repair all damage before using the winch again.
4. **Frame elements**: Examine the mast receiver, mast, and both segments of the boom for damage, deformation, corrosion, cracked welds, and severe wear. Inspect all pivot points for severe wear. All frame members should be square, rigid, and free of significant rusting. Remove rust with steel wool or a metal bristle brush , clean the areas to remove rust particles, and apply touchup paint to the affected areas.
5. **Hook**: Visually inspect the hook before each use. Look for deformations and cracks. Immediately discard the hook if it is cracked or if the throat opening is more than 15% in excess of the original throat opening. Discard the hook if it is twisted more than 10° from the plane of the hook in its original condition. Confirm normal operation and operation of the safety latch.

 Copyright 2020 Vestil Manufacturing Co.

6. **Vehicle**: Inspect the vehicle where the crane is mounted. Closely examine the area around the mounting plate. Look for rust, corrosion, and metal fatigue. Check the mounting plate (base of the mast), the anchoring hardware, and the vehicle bed/floor particularly around the anchor bolts. Make sure that the mast is securely anchored (i.e. does not wobble). Confirm that anchoring hardware is in normal condition.
7. **Labels**: Confirm that all labels are in good condition and in place as shown in the *LABELING DIAGRAM* (below).

Every 6 months:

Conduct a load test. Lift a test weight equal to 125% of the capacity. After the test, examine the crane, winch, cable, and the vehicle where the crane is mounted. Look for deformations, cracks, and metal fatigue. Do not continue to use the crane unless both it and the supporting vehicle are in normal condition.

TROUBLESHOOTING

Always unload the crane and disconnect the winch from the power supply before troubleshooting an issue.

Problem	Possible causes	Solutions
1) Winch doesn't work when button pressed	a. No supply voltage b. Bad connection in control circuit c. Battery discharged	a. Test with meter. Check circuit protectors for open condition. If circuit protection has opened, test all parts of circuit with multimeter. Verify power supply cord and controller cordare properly attached to winch. b. Test with multimeter. c. Test with volt meter. Charge battery is low (12.65V = full charge).
2) Cable jumps or lurches as the winch operates	d. Poor spooling on winch reel/drum e. Kink in cable	d. Spool out the cable. Inspect it for kinks, etc. Respool cable onto winch reel. Replace cable if damaged. e. Replace cable if kinks cannot be straightened.
3) Winch motor hums but drum does not rotate	f. Overload condition g. Supply voltage too low	f. Reduce load weight. Verify cable not binding. g. Check with meter. Charge battery (DC units) or change supply cord (AC units). Supply cord should be as wide and short as possible.
4) Mast does not rotate without great effort	h. Knobs tightened. i. Bearing overly worn.	h. Loosen knobs. i. Remove mast from mast receiver. Inspect bearing. Replace bearing if severely worn.
5) Personnel receive electric shocks when touching the jib or vehicle when winch in use.	j. Operating winch in wet conditions k. Winch wiring problem.	j. Allow winch to dry completely before using it again. k. Check winch electrical circuit including ground.

LABELING DIAGRAM

The unit should be labeled as shown in the diagram. However, label content and location are subject to change so your product might not be labeled exactly as shown. Compare this diagram to your *RECORD OF SATISFACTORY CONDITION*. Replace all labels that are damaged, missing, or not easily readable (e.g. faded). Order replacement labels by contacting the *PARTS DEPARTMENT* online at https://www.vestil.com/page-parts-request.php. Alternatively, you may request replacement parts and/or service by calling (260) 665-7586 and asking the operator to connect you to the PARTS DEPARTMENT.

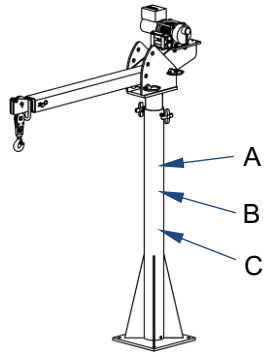

A: Label 1038

C: Label 1153

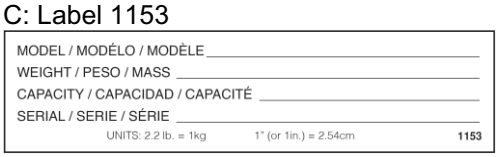

B: Label 827 (WTJ-20-3) or 828 (WTJ-20-4) [827 shown]

 Copyright 2020 Vestil Manufacturing Co.

LIMITED WARRANTY

Vestil Manufacturing Company ("Vestil") warrants this product to be free of defects in material and workmanship during the warranty period. Our warranty obligation is to provide a replacement for a defective, original part covered by the warranty after we receive a proper request from the Warrantee (you) for warranty service.

Who may request service?

Only a warrantee may request service. You are a warrantee if you purchased the product from Vestil or from an authorized distributor AND Vestil has been fully paid.

Definition of "original part"?

An original part is a part used to make the product as shipped to the Warrantee.

What is a "proper request"?

A request for warranty service is proper if Vestil receives: 1) a photocopy of the Customer Invoice that displays the shipping date; AND 2) a written request for warranty service including your name and phone number. Send requests by one of the following methods:

US Mail	Fax	Email
Vestil Manufacturing Company	(260) 665-1339	info@vestil.com
2999 North Wayne Street, PO Box 507	Phone	Enter "Warranty service request"
Angola, IN 46703	(260) 665-7586	in the subject field.

In the written request, list the parts believed to be defective and include the address where replacements should be delivered. After Vestil receives your request for warranty service, an authorized representative will contact you to determine whether your claim is covered by the warranty. Before providing warranty service, Vestil will require you to send the entire product, or just the defective part (or parts), to its facility in Angola, IN.

What is covered under the warranty?

The warranty covers defects in the following original, dynamic parts: motors, hydraulic pumps, motor controllers, and cylinders. It also covers defects in original parts that wear under normal usage conditions ("wearing parts"), such as bearings, hoses, wheels, seals, brushes, and batteries.

How long is the warranty period?

The warranty period for original dynamic components is 90 days. For wearing parts, the warranty period is 90 days. Both warranty periods begin on the date Vestil ships the product to the Warrantee. If the product was purchased from an authorized distributor, the periods begin when the distributor ships the product. Vestil may, at its sole discretion, extend a warranty period for products shipped from authorized distributors by up to 30 days to account for shipping time.

If a defective part is covered by the warranty, what will Vestil do to correct the problem?

Vestil will provide an appropriate replacement for any *covered* part. An authorized representative of Vestil will contact you to discuss your claim.

What is not covered by the warranty?

The Warrantee (you) is responsible for paying labor costs and freight costs to return the product to Vestil for warranty service.

Events that automatically void this Limited Warranty.

- Misuse;
- Negligent assembly, installation, operation or repair;
- Installation/use in corrosive environments;
- Inadequate or improper maintenance;
- Damage sustained during shipping;
- Collisions or other accidents that damage the product;
- Unauthorized modifications: Do not modify the product IN ANY WAY without first receiving written authorization from Vestil.

Do any other warranties apply to the product?

Vestil Manufacturing Co. makes no other express warranties. All implied warranties are disclaimed to the extent allowed by law. Any implied warranty not disclaimed is limited in scope to the terms of this Limited Warranty. Vestil makes no warranty or representation that this product complies with any state or local design, performance, or safety code or standard. Noncompliance with any such code or standard is not a defect in material or workmanship.

 Copyright 2020 Vestil Manufacturing Co.